0.5-300 MHz 2 Way Power Divider

Part Number: AM0R5-300PD2-1006

Electrical Specifications

Frequency range: 0.5-300 MHz
Insertion loss: 0.7 dB Max.
Isolation: 25 dB Min.
Amplitude Balance: 0.3 dB Max.
Phase Balance: 2° Max.
VSWR: 1.30:1 Max.
Power Rating: 1 Watt Max.

Mechanical

Mounting Method: Mounting Holes
Connector Type: SMA (F)
Dimensions: 1.250 x 1.250 x 0.75 in.

Environmental

Operating Temperature: -40 to +85˚C
Storage Temperature: -55 to +125˚C
Shock: 20 G. 11 ms.
Vibration: 20 G. 5 to 200 Hz.

Outline Drawing:

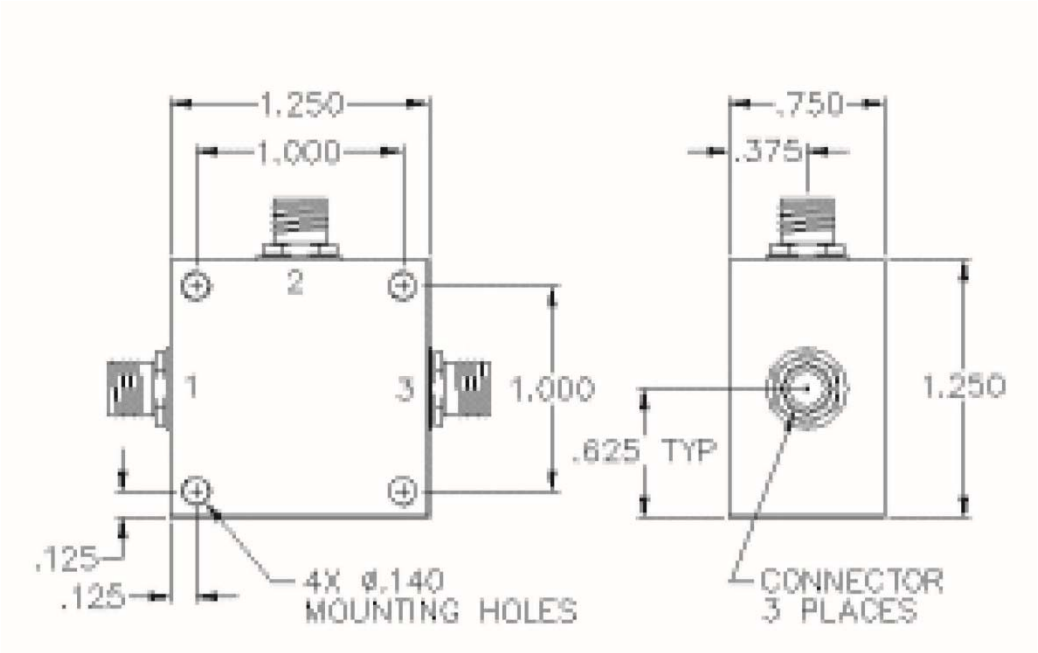

Port Configuration
Input : 2
Outputs:1, 3

Anatech Microwave Company

70 Outwater Lane Garfield, NJ 07026, USA

Phone: (973) 772-4242

Email: sales@anatechmicrowave.com

Web: www.anatechmicrowave.com