1000-26500 MHz Directional Coupler

Part Number: AM1000-26500DC1286

Electrical Specifications

Frequency Range: 1-26.5 GHz
Coupling: 16 ± 0.5 dB
Insertion Loss: 1.5 dB
Directivity: 16 dB
VSWR: 1.4:1 max
Power Handling: 20 W CW, 3 Kw Peak

Mechanical

Connector Type: SMA (F)
Dimensions: 73.7 x 16.5 x 12.7 mm

Environmental

Operating Temperature: -35 to 105˚ C
Storage Temperature: -55 to +125˚ C

Outline Drawing:

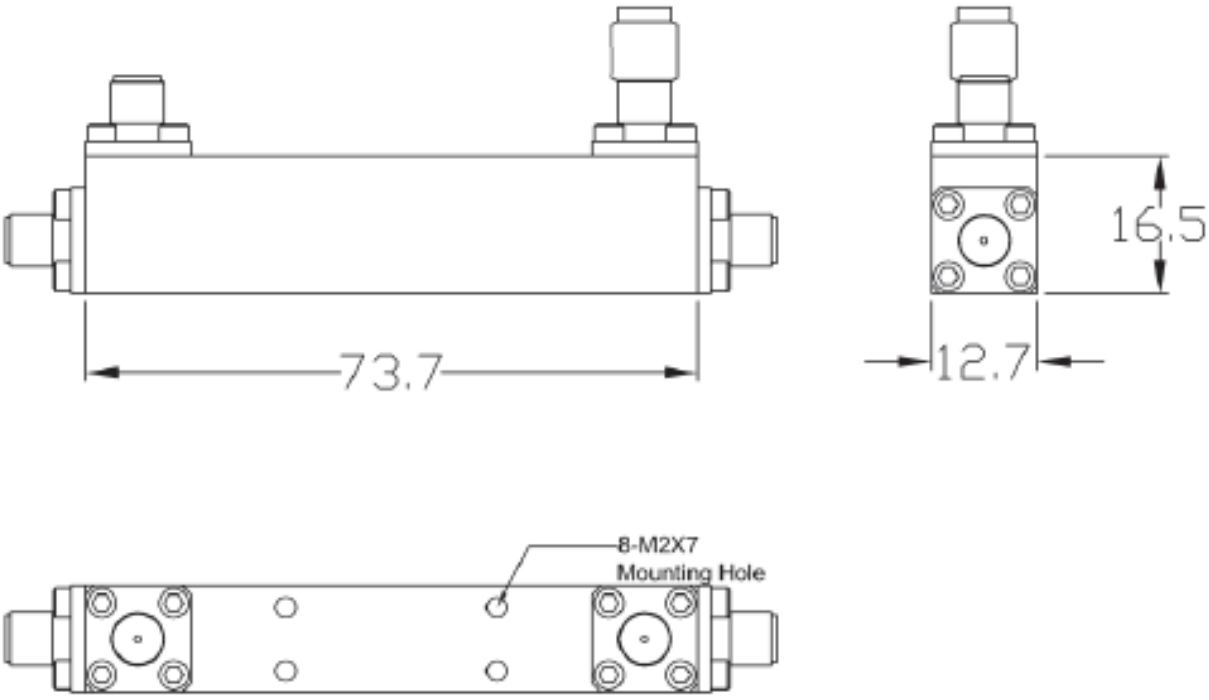

Anatech Microwave Company

70 Outwater Lane Garfield, NJ 07026, USA

Phone: (973) 772-4242

Email: sales@anatechmicrowave.com

Web: www.anatechmicrowave.com