20-1000 MHz 3 Way Power Divider

Part Number: AM20-1000PD3-1095

Electrical Specifications

Frequency Range: 20-1000 MHz
Insertion Loss: 1.2 dB Max.
Isolation: 20 dB Min.
Amplitude Balance: 0.6 dB Max.
Phase Balance: 5° Max.
VSWR: 1.50:1 Max.
Power Rating: 1 Watt Max.

Mechanical

Mounting Method: Threaded Mounting Holes
Connector Type: SMA
Dimensions: 1.250 x 1.250 x 0.750 in.

Environmental

Operating Temperature: -40 to +85˚C
Storage Temperature: -55 to +125˚C
Shock: 20 G. 11 ms.
Vibration: 20 G. 5 to 200 Hz.

Note: Available with BNC, TNC, F, and N connectors

Outline Drawing:

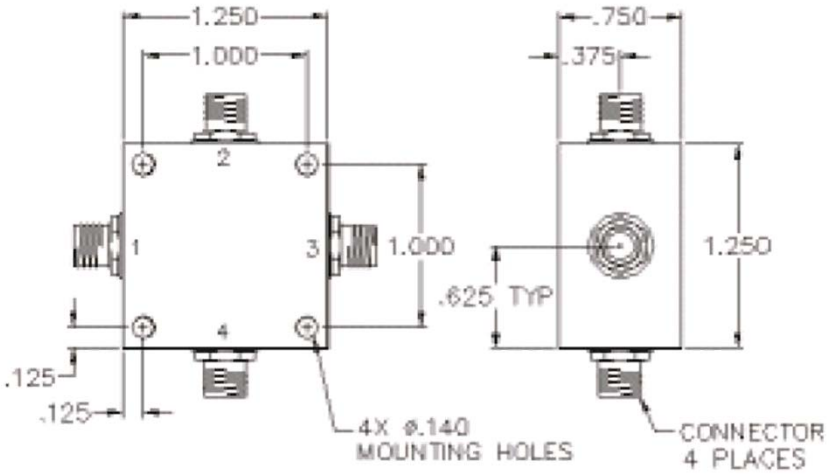

Port Configuration
Input: 1
Outputs: 2, 3, 4
Ground: Housing

Anatech Microwave Company

70 Outwater Lane Garfield, NJ 07026, USA

Phone: (973) 772-4242

Email: sales@anatechmicrowave.com

Web: www.anatechmicrowave.com