ANATECH ELECTRONICS, INC.

Manufacturer of RF & Microwave Filters and Products

ISO 9001 : 2000
REGISTERED FIRM

2.3-3.1 GHz Drop-In Isolator

Part Number: AM2300-3100IS119

Frequency: 2.3-3.1 GHz
Insertion Loss: 0.6 dB max
VSWR: 1.30 max
Isolation: 18 dB min
Average Power: 1 Watt
Operating Temperature: -0°C to +50°C

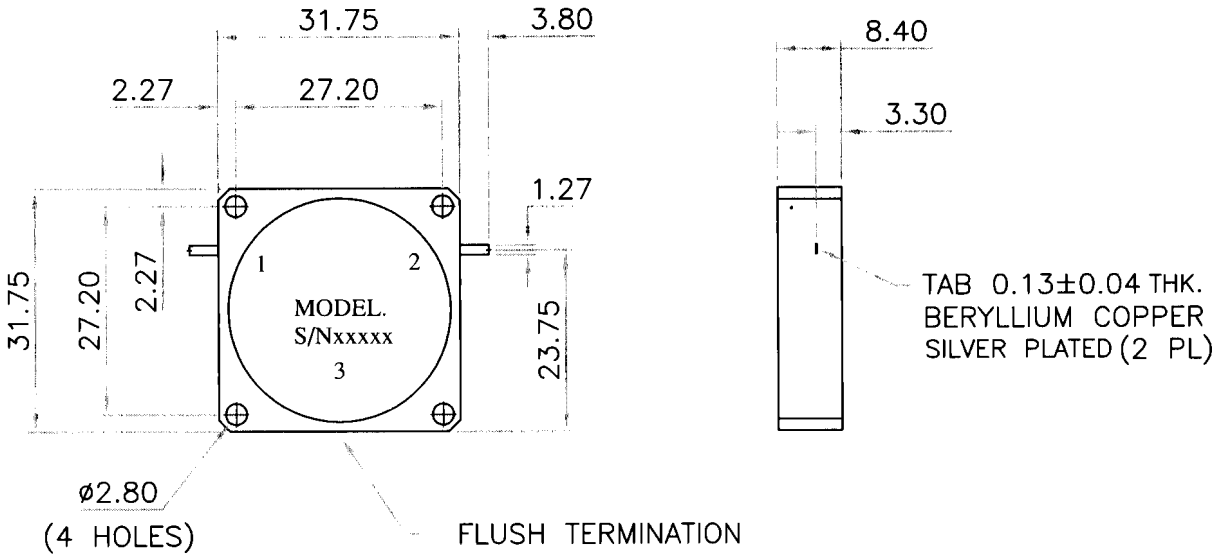

ANATECH ELECTRONICS INC. 70 Outwater Lane, Garfield, NJ 07026 Tel: (973) 772-4242 Fax: (973) 772-4646
E-Mail: sales@anatechelectronics.com Website: www.anatechelectronics.com