ANATECH ELECTRONICS, INC.

Manufacturer of RF & Microwave Filters and Products

ISO 9001 : 2000
REGISTERED FIRM

0.790-0.880 GHz Circulator

P/N: AM790-880CIR152

Frequency:	0.790-0.880 GHz
Isolation:	20 dB min
Insertion Loss:	0.40 dB max
VSWR:	1.25 max
Operating Temperature:	0 to +50 deg C
Ciculator Power: Peak: Average:	 500 Watts 65 Watts
Dimensions (W x L xT):	35 x 40 x 26 mm

Outline Drawing:

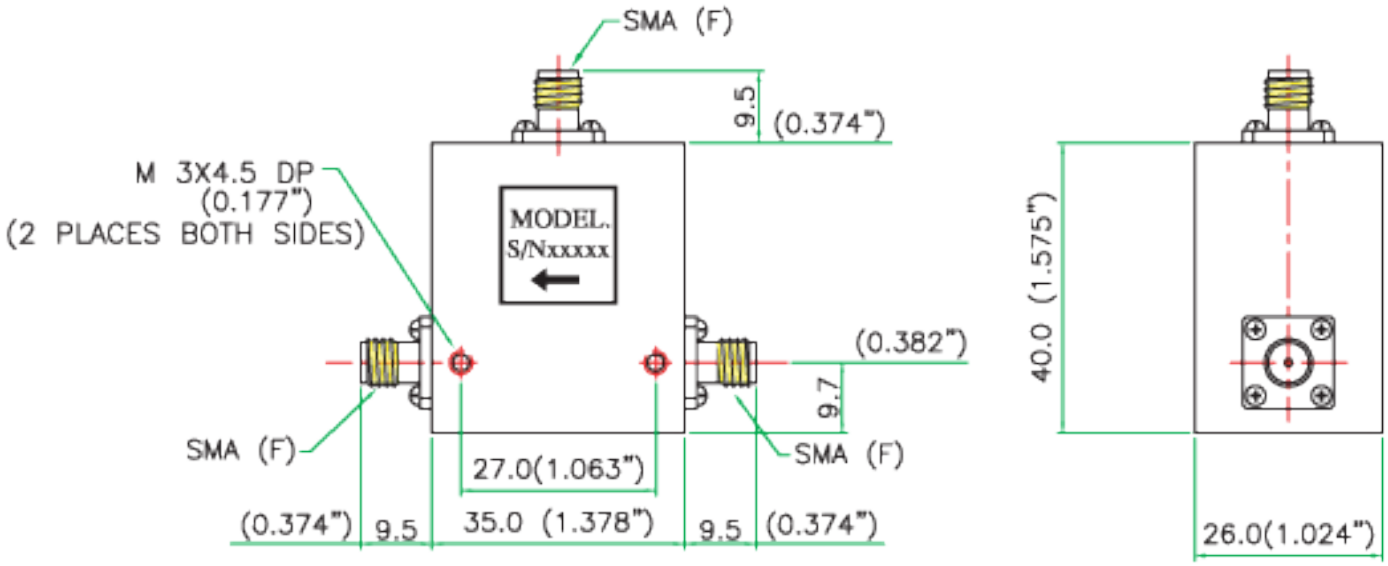

ANATECH ELECTRONICS INC. 70 Outwater Lane, Garfield, NJ 07026 Tel: (973) 772-4242 Fax: (973) 772-4646
E-Mail: sales@anatechelectronics.com Website: www.anatechelectronics.com